3P Volume Filter VF1 combi

Art.-Nr. 1000592

3P Technik

Description:

Rainwater filter for installation within rainwater tanks or before the tank in the ground.

The VF1 Combi has the cleaned water outlet at the bottom of the filter. This position makes installing the Combi inside tanks very practical, and gives a high degree of flexibility as to the angle and direction of the cleaned water outlet pipe when the Combi is used before the tank.

The VF1 Combi can also be fitted directly to the top surface of the rainwater tank, and act as a second turret, using a seal we can provide.

Connection capacity for roof areas up to 450 m².

Height difference between inlet and outlet 300 mm.

The cleaned water can be used in washing machines, toilet flushing and garden watering, in homes, in commerce, in public buildings and in industry.

The filter should to be cleaned 1 - 2 times per year, depending on the contamination.

How it works:

1. As water flows through the inlet the level builds up and is equally distributed across the cascade.

2. The largest dirt particles flow over the primary filter cascades directly to the sewer.

3. The pre-filtered water then flows over the secondary filter sieve (mesh size 0.65 mm). Due to the special mesh structure of the sieve, any dirt washes directly into the sewer which means the filter is self cleaning, with very low maintenance.

4. Cleaned water flows to storage, through the Combi's bottom outlet.

5. Dirt passes to waste.

* Illustration is of a standard VF1. The Combi has it's clean water (No. 4) outlet vertically downwards.

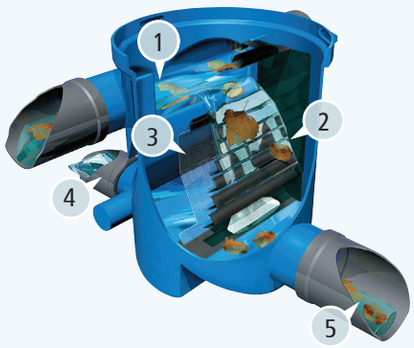

Technical Data:

Filter according to DIN 1989-2, Typ C

Connection inlet: 2 x DN 100 (110mm OD)
Outlet into tank: DN 100 (110mm OD)
Outlet into sewer: DN 100 (110mm OD)

Height difference between rainwater inlet and outlet 300 mm.

Housing material: Polyethylene

Filter cartridge: Stainless steel 1.4301
Mesh size: 0,65 mm

Material Cascade insert: Polyethylene

Weight: 6,2 kg

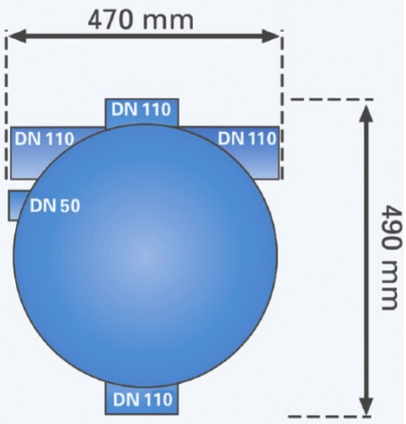

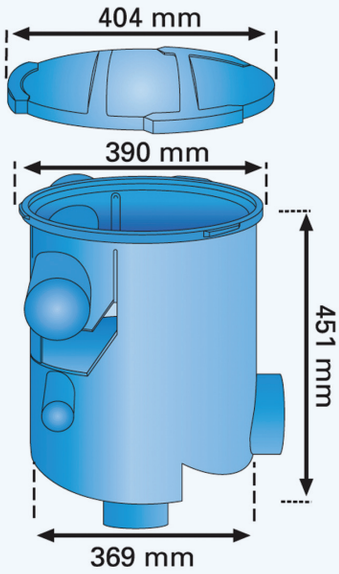

Example 1:

3P Volume Filter VF1 Combi, with optional telescopic extention, on top of a plastic tank.

Example 2:

3P Volume Filter VF1 combi installed inside the manhole pit of a plastic tank. Special installation with Overflow Siphon Mono.

Example 3:

Installation inside the manhole with a 3P Rapid connection.

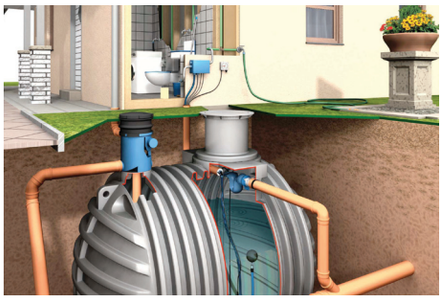

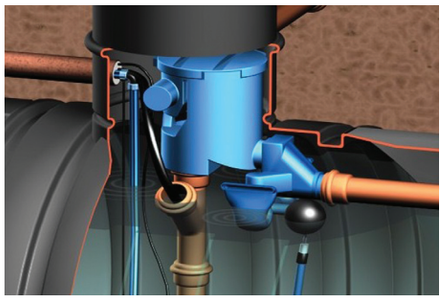

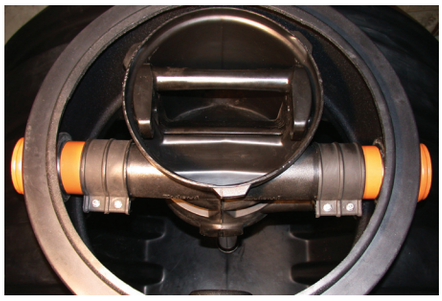

Text for invitation of tenders:

Pos.	Quantity	Article	Price in £
1.1	_____	3P Volume Filter VF1 combi Filter for installation in tanks Inlet rainwater 2 x DN 100 (110mm OD), Outlet into tank DN 100 (110mm OD), Outlet into sewer DN 100 (110mm OD). Height difference between rainwater inlet and outlet 300 mm. Connection capacity according to DIN 1986 for roof areas up to 450 m².	_____
1.2	_____	Telescopic extention for 3P Volume Filter VF1 Plastic (PE) shaft for the installation of the 3P Volume Filter VF1. Telescopic extention can be directly connected with the 3P Volume Filter VF1 with a bayonet fitting.	_____
1.3	_____	3P Removal Handle for VF1 For filter removal in deeper installations.	_____

Accessories 1:

3P Telescopic extention Art.-Nr. 1000560
Plastic shaft for the installation directly into the ground. Material Polyethylene.

Accessories 2:

Removal Handle Art.-Nr. 1000550
For filter removal in deeper installations.
Length: 50 cm
Material: Stainless steel

Observations:

Packing unit:

m³-Carton: 8 pieces
Pallet: 16 pieces

EAN: